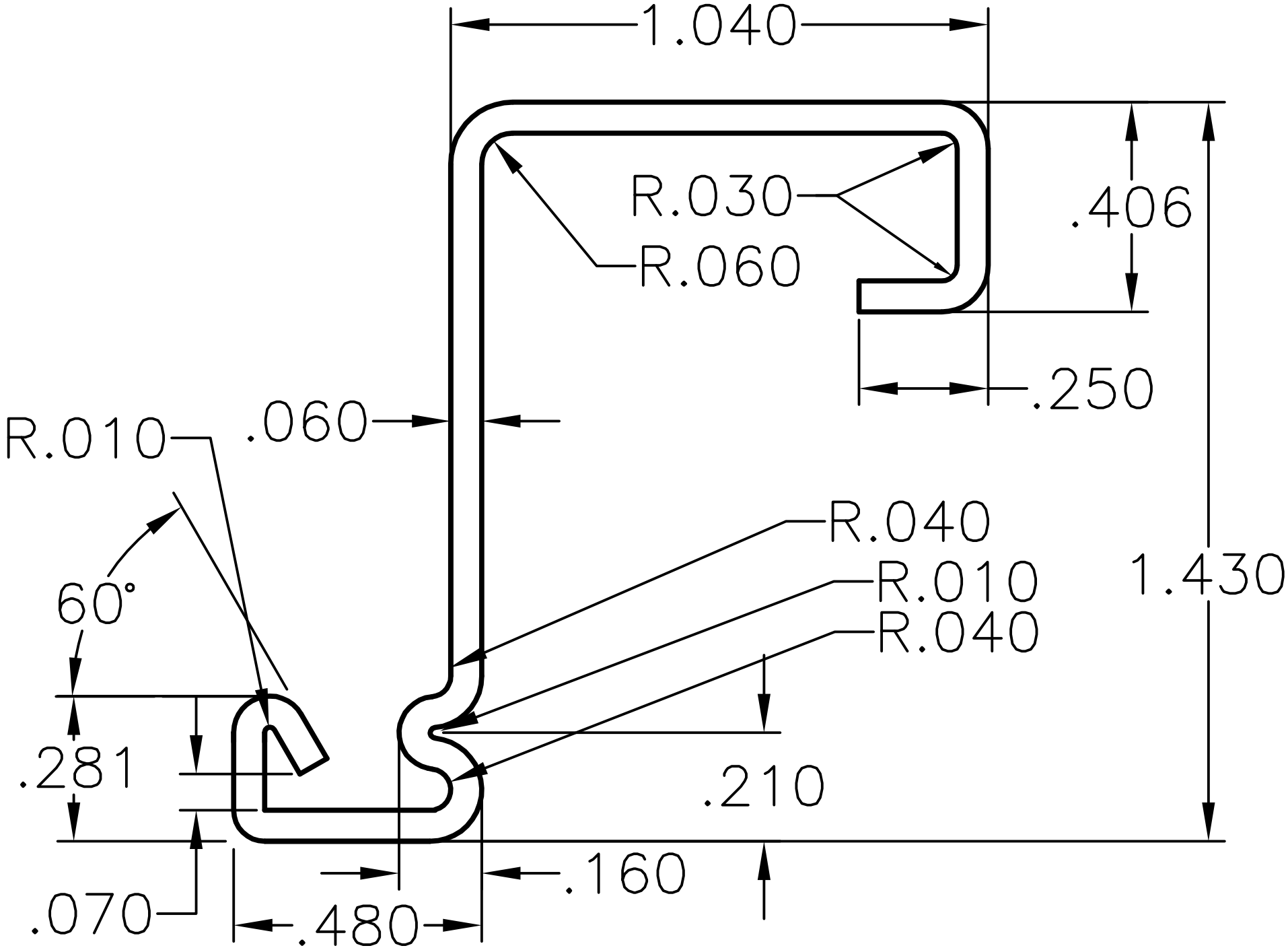
1.040
R.030
R.060
.406
.250
.060
R.010
R.040
R.010
R.040
1.430
60°
.281
.210
.160
.070
.480